Rounds 1 & 2 Thursday & Friday, January 28 & 29, 2021

SHOTLINK

Farmers Insurance Open

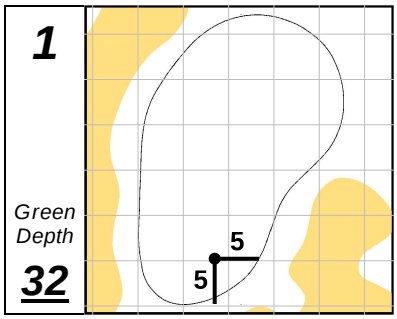

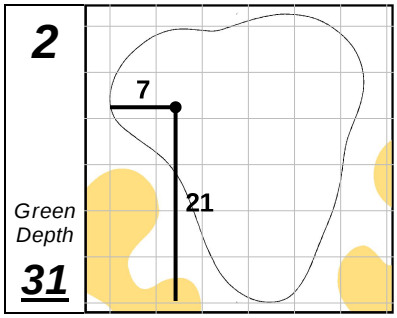

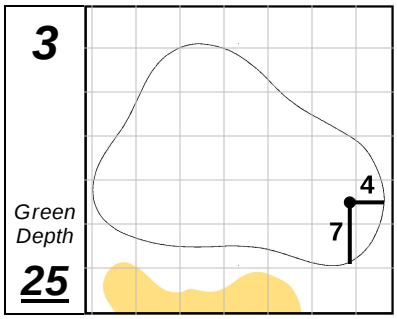

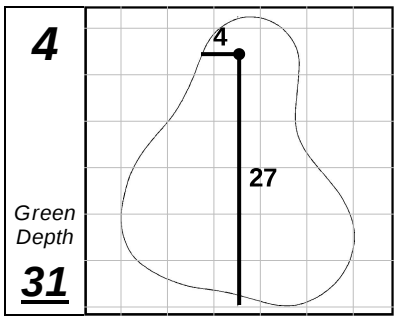

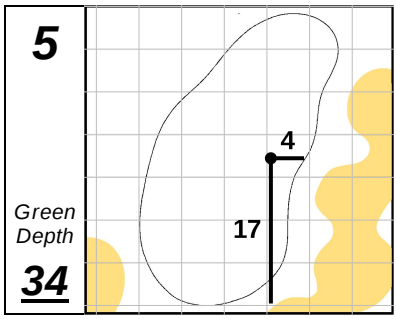

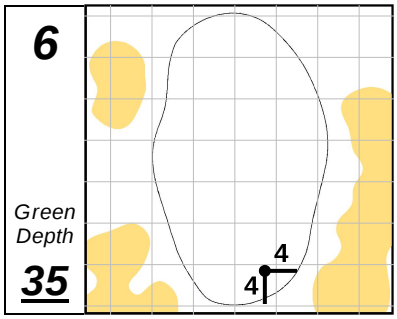

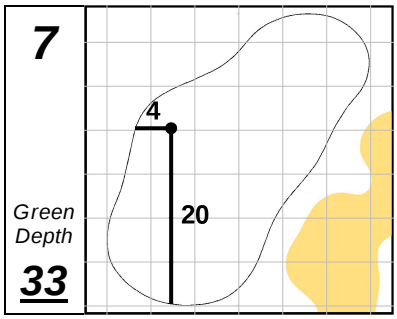

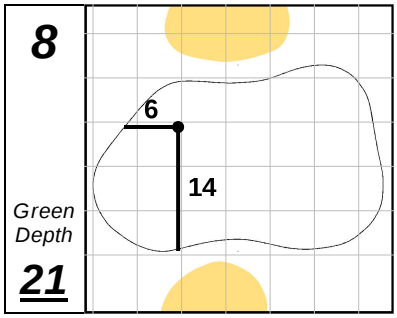

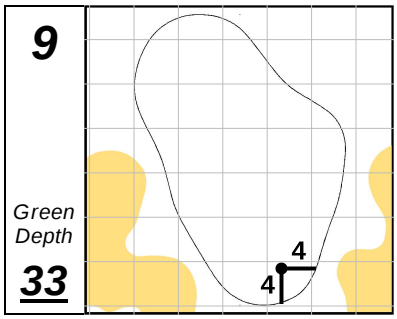

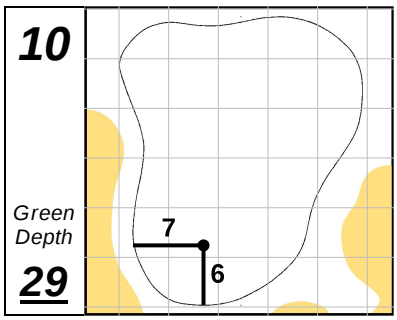

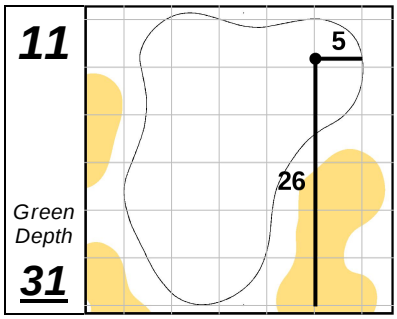

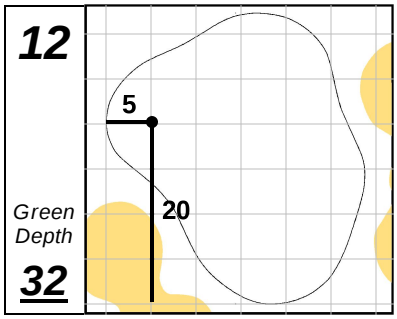

Torrey Pines GC (South)

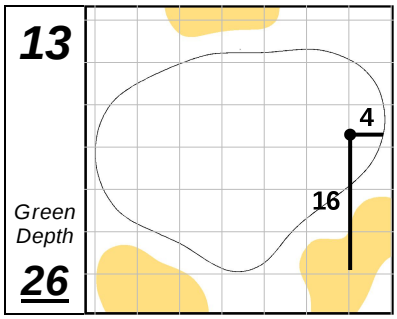

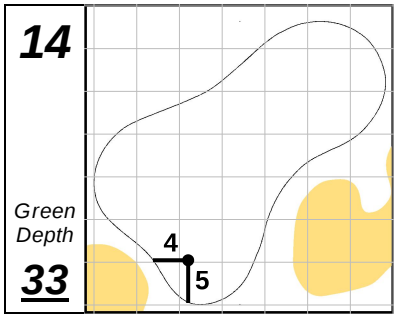

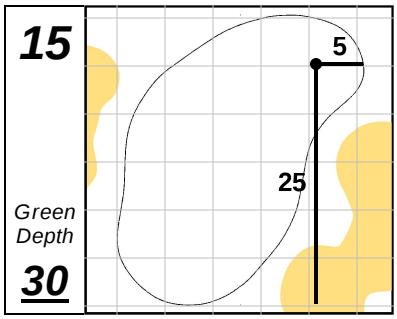

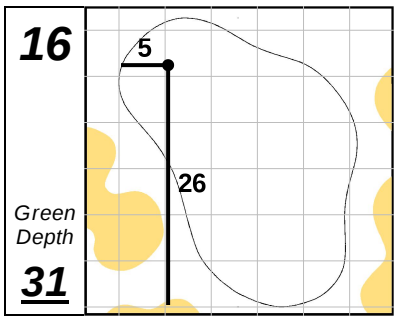

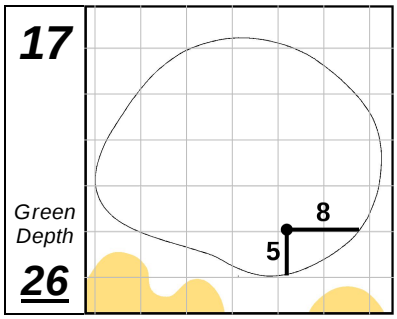

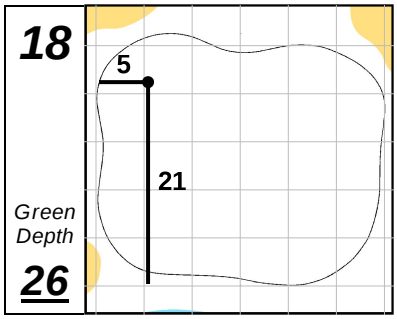

Each side of a complete square on the green represents 5 YARDS.

Wednesday, January 27, 2021 10:10 AM